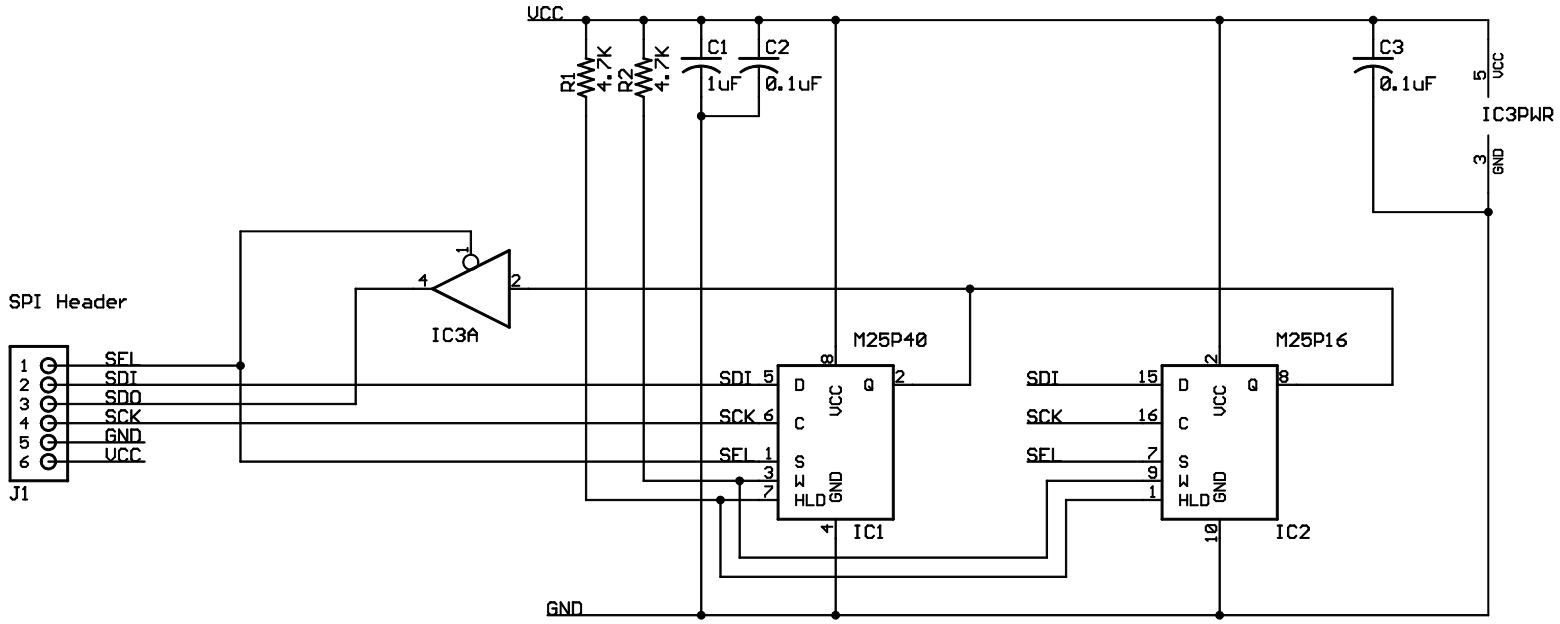

Note: Only IC1 or IC2 is loaded on one board.

Digilent Serial Flash Module Copyright 2005, 2006, 2007 Digilent Inc		Engineer: NEA
SHEET: Main		Author: NEA
TITLE: PmodSF		Rev: C
Doc#: 500-103	Date: 02/23/2007	Sheet: 1/1

Digilent Inc.

WEEE